INDIAN INSTITUTE OF TECHNOLOGY

Date: __/__/2011 (_____day, AN/FN) **End Autumn Semester** **Time:** 3 hrs **Full Marks:** 50

Subject Name: Dynamics **Subject No.:** ME20001 **No of students:** 177 -, 2nd **Year B. Tech. (ME, MF, AE)**

Question paper has 1 page. Answer any five questions. All questions carry equal marks. Any assumptions made in solving the questions should be justified with reasons. ***g =9.8m/s²***

1. A person stands at A on a platform which is rotating with an angular acceleration of 0.2 rad/sec² and at the instant shown has an angular velocity of 0.5 rad/sec in the direction indicated in figure 1. If the person walks at a constant speed of 0.75 m/sec measured relative to the platform, determine the acceleration (magnitude and direction as observed from the ground) of the person (a) at point D if the path ADC is followed (d = 1 m), (b) at point B if the path ABC is followed (r = 3 m). Use the coordinate system shown in the figure to express the results.

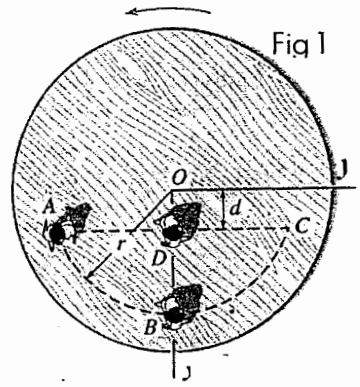

Fig 1

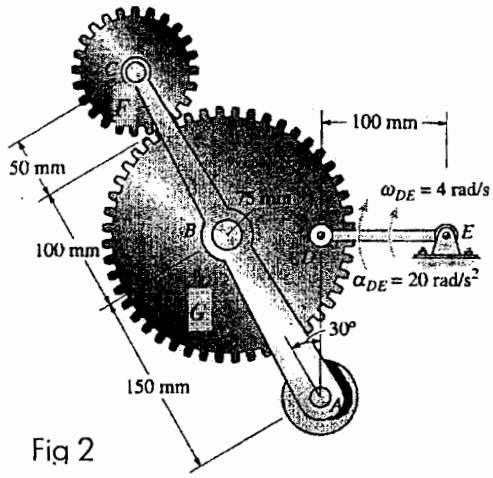

Fig 2

2. The mechanism shown in figure 2 gives a rocking motion to the link AC, necessary for the operation of a printing press. If the link DE has angular velocity of 4 rad/sec clockwise and angular acceleration of 20 rad/sec² clockwise, determine the angular velocities of the smaller gear F and crank AC at the instant shown. Also find the angular acceleration of crank AC. Note that ABDE constitute a simple 4 bar linkage.

3. The spool in figure 3 has a mass of 60 kg and a radius of gyration 0.3 m. If it is initially released from rest, determine how far it descends down the plane before it attains an angular velocity of 6 rad/sec if, the plane (a) is smooth, (b) has a coefficient of kinetic friction of 0.2. Neglect mass of cord wrapped around the spool.

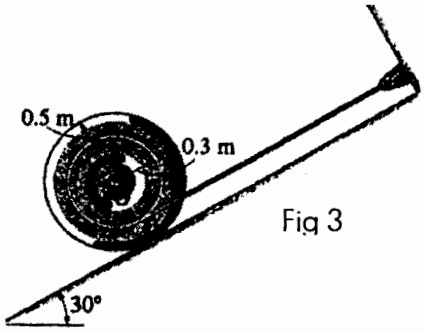

Fig 3

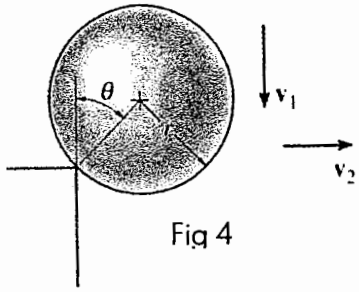

Fig 4

4. The solid ball of mass m and radius r in figure 4 is dropped with a velocity $\mathbf{v}_1$ onto the edge of a rough step. If it rebounds horizontally off the step with a velocity $\mathbf{v}_2$, determine the angle θ at which contact occurs. Assume no slipping when the ball strikes the step. The coefficient of restitution is e.

5. Spool B in figure 5 is at rest and spool A is rotating at 6 rad/sec when the slack in the cord connecting them is taken up. At this moment the unwrapped cord is at 0.36 m from the center of A and 0.12 m from the center of B as shown. Determine the angular velocity of each spool immediately after the cord is jerked tight. Spools A and B have weights and radii of gyration W_A = 134 N, k_A = 24 cm and W_B = 67 N, k_B = 18 cm respectively. Axis of rotation is horizontal. There is no contact with the ground.

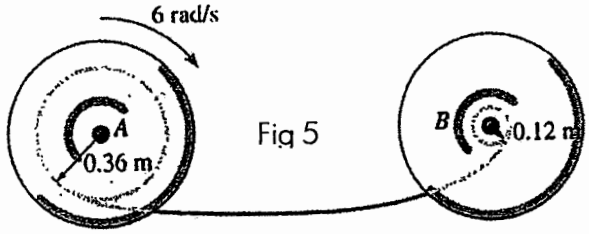

Fig 5

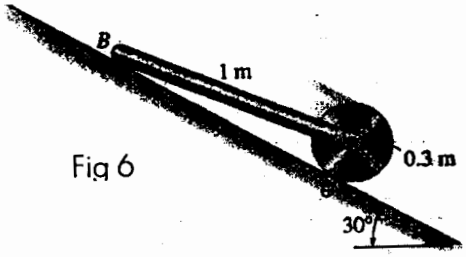

Fig 6

6. The assembly shown in figure 6 consists of an 8 kg disk and a 10 kg bar which is connected by a revolute joint to the disk. if the system is released from rest, determine the angular acceleration of the disk. The coefficents of static and kinectic friction between the disk and the inclined plane are 0.6 and 0.4 respectivey. Neglect friction at B. Assume no slipping of the disk. Is the assumption valid?