Laser Surface Treatment

*Laser Surface Transformation Hardening

* Laser Melting & Re-solidification

* Laser Surface Alloying

* Laser Surface Cladding

Need for Surface Treatment

To improve

- Hardness,
- Strength,
- Wear resistance,
- Corrosion resistance and
- Fatigue life

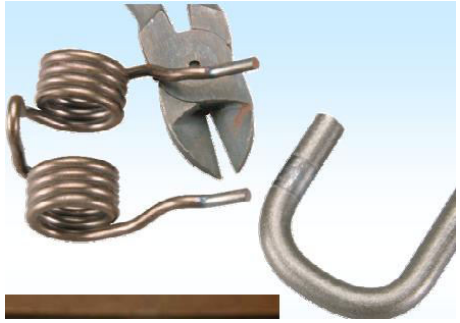

Particular parts of surfaces which are vulnerable

Laser Surface Treatment- classifications

1)

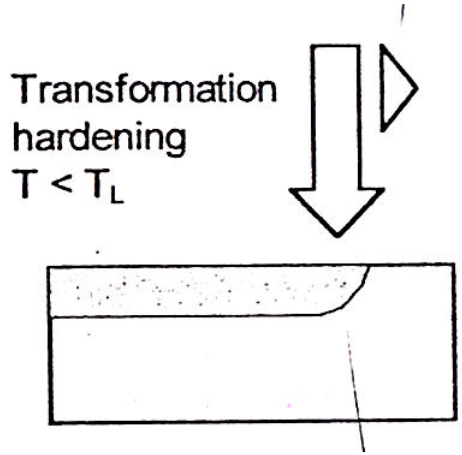

2)

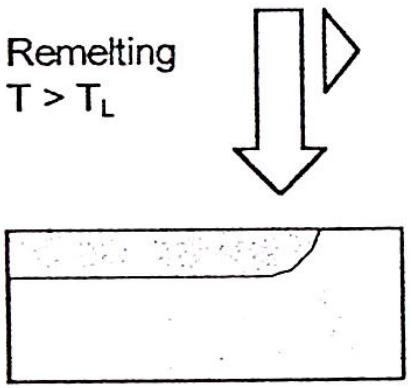

3)

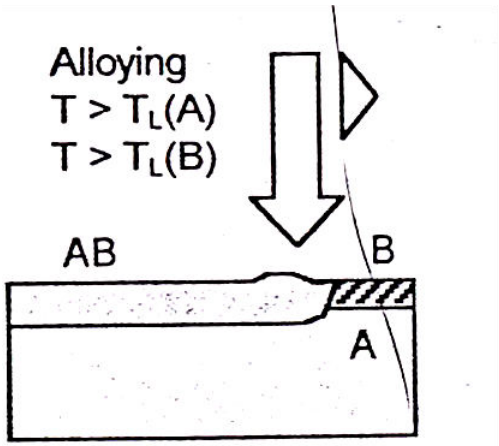

4)

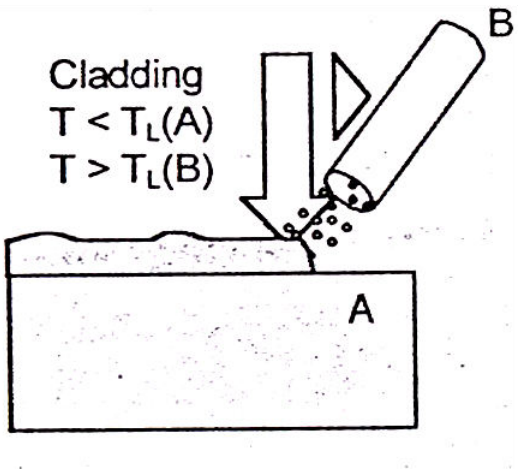

Laser Surface Transformation Hardening (LATH):

A thin top layer of workpiece is heated above phase transformation temperature by laser irradiation, maintaining the rest of the bulk material near room temperature.

After the end of laser irradiation the hot thin layer cools at a very fast rate by heat conduction in rest of the material- called self-quenching. Fast cooling produces a new phase, for example martensite in carbon steel, which is a hard phase. Thus, surface gets hardened without altering the rest of the material.

Transformation in steel : basics

At room temperature, plain carbon steels :a mixture of a body-centered cubic phase (Ferrite) and an iron carbide phase.

At eutectoid temperature (727 ºC): Carbides and Ferrite dissolve into a single face-centered cubic phase called Austenite.

Austenite (γ) $\rightleftharpoons$ Ferrite (α) + Cementite (Fe_3C)

FCC	**BCC**	**Orthorhombic**
0.8 %	**0.02%**	**6.67%**

Under slow cooling conditions, high-temperature Austenite phase reverts to the ferrite and carbide structure.

If cooling rate is more than 10^3-10^4 K/s:

Austenite (γ) $\longrightarrow$ Martensite (α')

FCC	**BCT**
0.8 %	**0.8%**

No compositional change or diffusion

In fast cooling Carbon tends to move- Distortion in Lattice Structure Compressive stress at the surface: Increased Hardness

Materials Surface Hardened by Laser: Carbon Steel, Alloy Steel, Tool Steel, Cast Iron, Copper based alloys e.g. Brass, Aluminum bronze

Micro Hardness increase: up to 2 times,

Depth: up to 2mm

Application: transformation hardening

- Automobile Sector:
  - Hardening of engine & drive trains,
  - Components, like- Cylinder liners, piston rings, Cam.
- Hardening of files.
- Hardening of machine shafts.
- Hardening of Gear teeth, Rails.

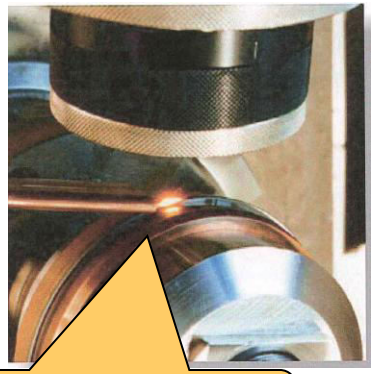

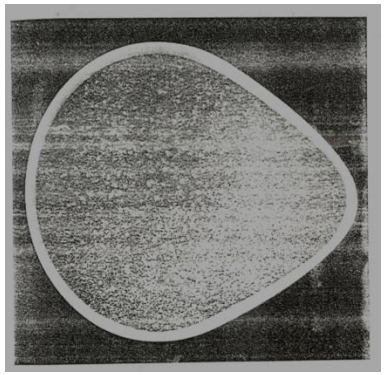

Hardening of piton rings

mech14.weebly.com

Advantages of Laser Hardening

- Precise control of Heat Input to Localized Areas
- Minimum Distortion
- Hard to reach areas can be Heat Treated if a line of sight exists
- No Quenchants required- Self Quenching
- Time Efficient Process
- No post processing required

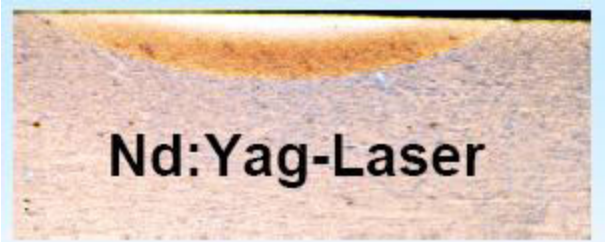

Limitation of Laser Hardening

- Limited depth of hardening : 0.1-2mm
- Not enough time to become homogenous, equilibrium at temperature: Laser hardening-only of relatively homogeneous materials with narrow layers

Laser Re-solidification

Laser Surface Melting & Re-solidification at fast cooling rates improves surface characteristics (wear, corrosion resistance) through one or more of the following processes:

*Grain refinement

*Homogenization of microstructure

*Enhancement of solid solubility

*Formation of meta-stable state / Amorphous phase i.e. surface glazing

Cooling rates: 10^8-10^{11}K/s

Laser Power Density= 10^5-10^7W/cm^2

Interaction Time = 10^{-4}-10^{-7}s

- Cast Iron, Tool Steel, Modified 316(N) Stainless Steel Weld Metal, Al-Si alloys, Camshaft.

- All advantages of Fast quenching

Laser Rapid Solidification

Cast Iron is most commonly used engineering material, it has usually non-homogenous structure of ferrite and graphite in various forms (flakes, spheres, etc.) .

On Remelting,

Graphite → Cementite &

Austenite→ Martensite

This improves hardness & improves wear resistance to great extent. Service Life increased by2-3 times

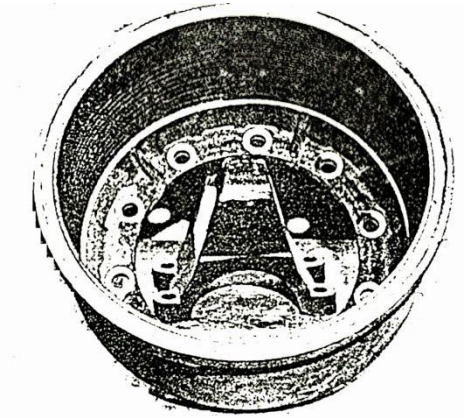

Applications:

- Automobile Sector:
  - Brake Drum,
  - Fillets of crank shafts.
- Hardening of shawl tips for earth moving applications.

Laser Surface Alloying & Cladding

Laser Surface Alloying: A thin layer along with appropriate alloying elements are melted by the laser beam to form an alloyed layer

Laser Cladding involves bonding of a new material to the existing surface with excellent metallurgical bond with the substrate and with minimum dilution of substrate material.

* Tailored surface properties of a components to meet virtually any functional requirements without compromising in bulk properties.

* Improve the part's ability to withstand aggressive environments.

* Typically an inexpensive substrate is alloyed or cladded with a more expensive material to achieve the desired surface properties

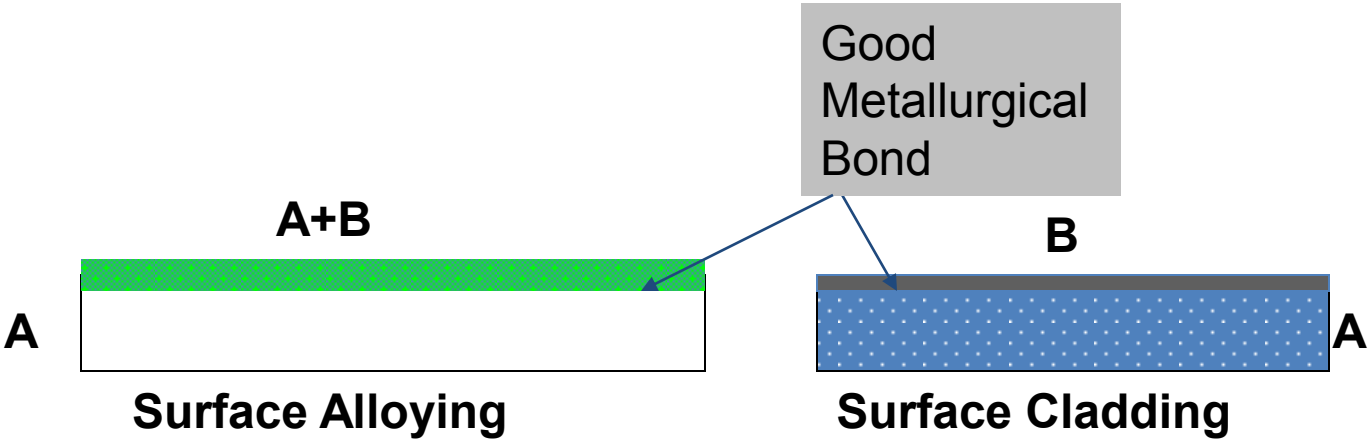

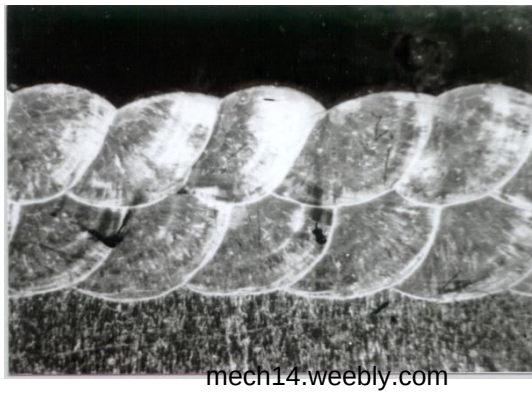

mech14.weebly.com

Laser Alloying/Cladding

Various method of laser alloying / cladding

1. By pre-placing the powders with a binder

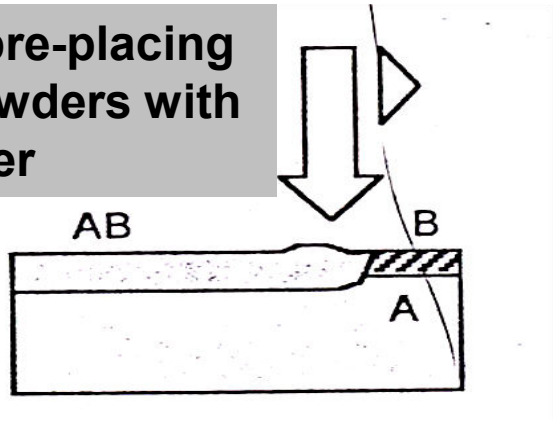

2. By powder blowing.

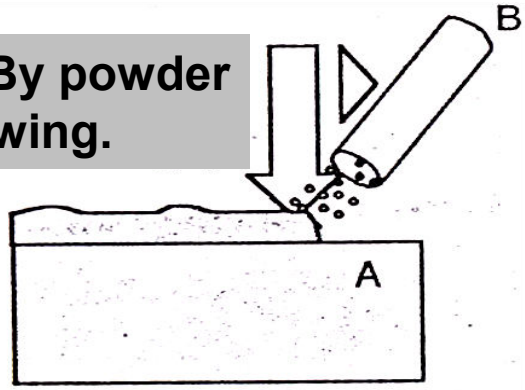

3. By Wire Feeding

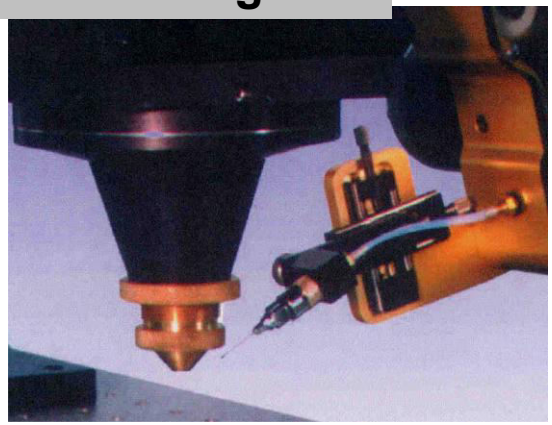

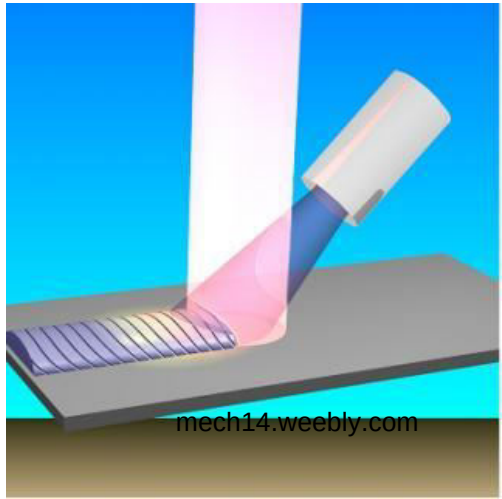

Application of laser cladding /alloying

S.No.	Component	Company
1	Turbine blade, Shroud interlock	Roll Royce, Pratt & Whitney, Westing House BHEL, Hyderabad
2	Automotive Components	General Motors
3	Aerospace Components	Rockwell
4	Valve stem valve seat, Aluminum block	Fiat
5	Steam & salt water valve, Aircraft carrier components, Jet engine parts	Stardyne inc.
6	Offshore drilling parts for oil industries	Trumpf Ind. Laser, ABB, Rofin Sinar

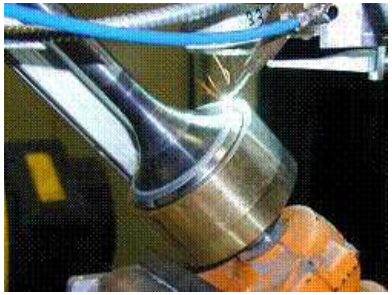

Laser Rapid / Additive Manufacturing

Steps involved in Laser Additive Manufacturing

i. Preparing a 3 D CAD model of the object to be fabricated

ii. Generation of mathematical data of the 3D CAD model

iii. Slicing the 3D model in thin layers

iv. Generation of 3d object with the help of laser by layer by layer though one of the following methods:

(a) Selective Laser Sintering or melting (SLS /M] using preplaced powder bed

(b) Directly metal laser depositing (DMLD) using blown powder

Selective Laser Sintering / Melting Process

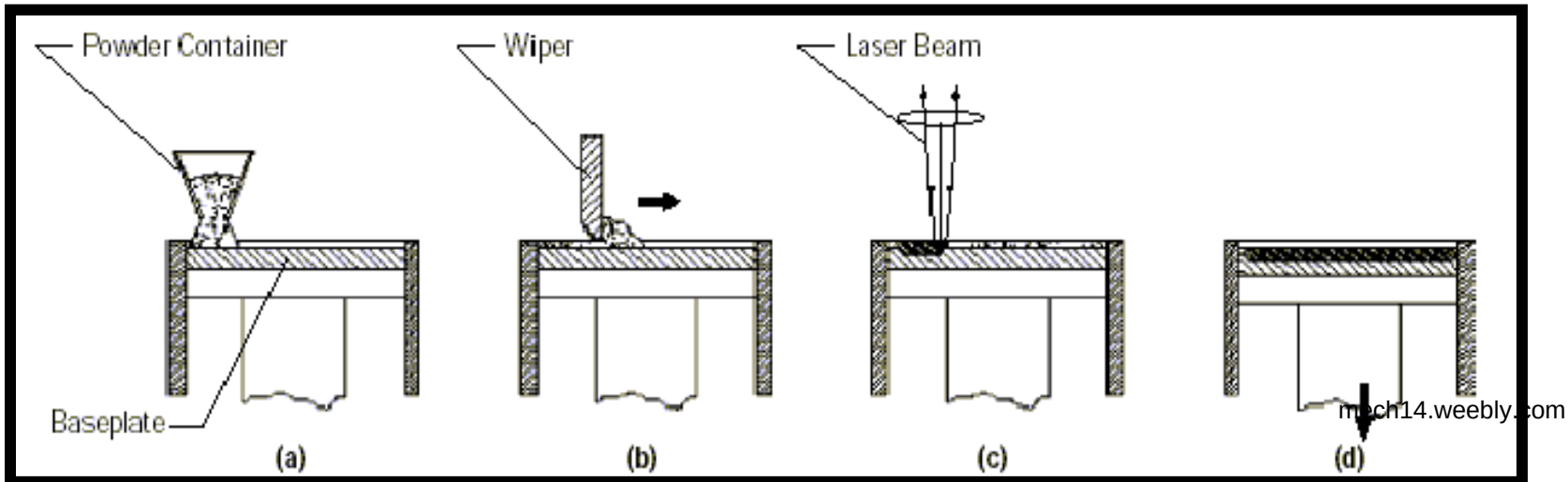

Direct Metal Laser Deposition by Blown Powder Method

CAD Model Making

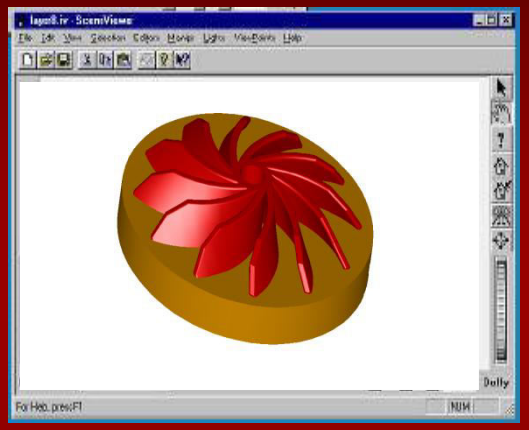

- Object + Imaging system
- Designer+ 3D CAD S/W
- Math data + Analysis
- Slicing

Laser Processing

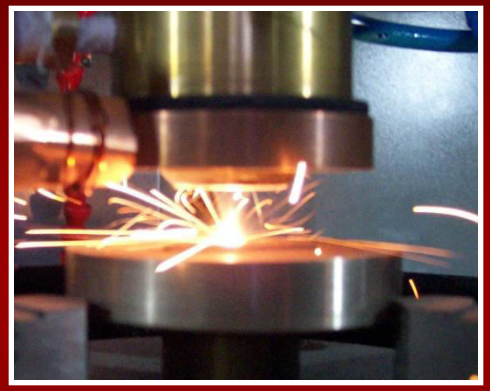

- Job manipulation
- Mat'l deposition

LRM Component

- Ready to use
- Machining
- Annealing

Few LRM Components

Simple cage

Complex cage

Square tube

3-vane fan

Impeller

Complex Profile