Practice problems for Convective Heat Transfer

1. Water at 30°C flows over a flat plate $1\text{m}\times1\text{m}$ at 10°C with a free stream velocity of 4 m/s. Determine the thickness of boundary layers, local and average value of drag coefficient and convection coefficient. The different property values of water at $20\,^{\circ}\text{C}$ are given by: $\upsilon = 1.006\times10^{-6}\ \text{m}^2/\text{s},\ \text{Pr} = 7.02, k = 0.5978\,\text{W/mK}$.

$$\left[\begin{array}{l} Ans: \delta_x = 18.24\,\text{mm},\ \text{C}_{fx} = 2.83\times10^{-3}, \\ \bar{C}_f = 3.54\times10^{-3},\ h_x = 6449.6\ \text{W/m}^2\text{K}, \bar{\text{h}}=8062\,\text{W/m}^2\text{K} \end{array}\right]$$

2. In a certain glass making process, a square plate of glass 1 m^2 area and 3mm thick heated uniformly so 90°C is cooled by air at 20°C flowing over both sides parallel to the plate at 2 m/s. Calculate the initial rate of cooling the plate.
Neglect temperature gradient in the glass plate and consider only forced convection.
Take for glass: $\rho = 2500\,\text{kg/m}^3,\ c_p = 0.67\,\text{kJ/kgK}$
Take the following properties of air:
$\rho = 1.076\,\text{kg/m}^3,\ c_p = 1008\,\text{J/kgK},\ k = 0.0286\,\text{W/m}^{\circ}\text{C}$, and μ=19.8×10^{-6} N-s/m^2 .

$$\left[Ans: 0.155\,^{\circ}\text{C/s}\right]$$

3. A flat plate 1m wide and 1.5 m long is to be maintained at 90°C in air with a free stream temperature of 10°C. Determine the velocity with which air must flow over flat plate along 1.5 m side so that the rate of energy dissipation from the plate is 3.75 kW. Take the following properties of air at 50°C: $\rho = 1.09\,\text{kg/m}^3$, $k = 0.028\,\text{W/m}^{\circ}\text{C}$, $c_p = 1.007\,\text{kJ/kgK}$, $\mu = 2.03\times10^{-5}$ kg/m-s and $\text{Pr} = 0.7$.

$$\left[Ans: 100\,\text{m/s}\right]$$

4. Air at 30°C flows with a velocity of 2.8 m/s over a plate 1000 mm (length)x 600 mm (width) x 25 mm (thickness). The top surface of the plate is maintained at 90°C. If the thermal conductivity of the plate material is 25W/m°C, calculate :

i. Heat lost by the plate,
ii. Bottom temperature of the plate for the steady slate condition.

The thermo-physical properties of air at mean film temperature (90 + 30)/2 = 60°C are:
$\rho = 1.06\,\text{kg/m}^3,\ k = 0.02894\,\text{W/m}^{\circ}\text{C},\ c_p = 1.005\,\text{kJ/kgK},\ \upsilon = 18.97\times10^{-6}\ \text{m}^2/\text{s},\ \text{Pr} = 0.696$

$$\left[Ans: i.\ 235\ \text{W},\ ii.\ 90.39^{\circ}\text{C}\right]$$

5. Air at 20°C and at a pressure of 1 bar is flowing over a flat plate at a velocity of 3 m/s. If the plate is 280 mm wide and at 56°C, Calculate the following quantities at $x = 280$ mm, given that properties of air at the bulk mean temperature $\left(\frac{20+56}{2}\right) = 38\ ^{o}\text{C}$ are:

$\rho = 1.1374\,\text{kg/m}^3$, $k = 0.02732\,\text{W/m}^{o}\text{C}$, $c_p = 1.005\,\text{kJ/kgK}$, $\upsilon = 16.768 \times 10^{-6}\ \text{m}^2/\text{s}$, $\text{Pr} = 0.7$

i. Boundary layer thickness,
ii. Local friction coefficient,
iii. Average friction coefficient,
iv. Shearing stress due to friction,
v. Thickness of the thermal boundary layer,
vi. Local convective heat transfer coefficient,
vii. Average convective heat transfer coefficient,
viii. Rate of heat transfer by convection,
ix. Total drag force on the plate,
x. Total mass flow rate through the boundary.

(Suitable velocity profile may be assumed)

[Ans : 6.26 mm, 0.002969, 0.005939, 0.01519 N/m^2, 7.05 mm, 6.43 W/ m^{2o}C, 12.86 W/ m^{2o}C, 36.29 W, 0.00119 N, 0.01335 kg/s]

6. Considering the data of problem 1, determine the average value of convection coefficient and C_f values, taking into consideration the laminar region. Compare with the problem 4. Plate length = 1 m, velocity = 4 m/s, plate temperature = 10°C, Water temperature = 30°C.Film temperature= 20°C. The property values are $\upsilon = 1.006 \times 10^{-6}\ \text{m}^2/\text{s}$, $\text{Pr} = 7.02$ and $k = 0.5978\,\text{W/mK}$.

$$\left[Ans : \bar{C}_f = 3.10 \times 10^{-3}\right]$$

7. Engine oil at 60°C flows over a flat surface with a velocity of 2 m/s, the length of the surface being 0.4m. If the plate has a uniform heat flux of 10 kW/m^2, determine the value of average convective heat transfer coefficient. Also find the temperature of the plate at the trailing edge.

We have the kinematic viscosity = 83×10^{-6} m^2/s, Pr = 1050, k = 0.1407 W/mK. Use the following data from the property tables:

	ν	Pr	k
80°C	37×10^{-6}	490	0.1384
60°C	83×10^{-6}	1050	0.1407

$$\left[Ans : \bar{h} = 348.6\,\text{W/m}^2\text{K},\ T = 117.4\ ^{o}\text{C}\right]$$

8. A thin conducting plate separates two parallel air streams. The hot stream is at 200°C and 1 atm pressure. The free stream velocity is 15 m/5. The cold stream is at 20°C and 2 atm pressure and the free stream velocity is 5 m/s. Determine the heat flux at the midpoint of the plate of 1 m length.

[Ans: Heat flux: 1723 W]

9. In an industrial facility, air is to be preheated before entering a furnace by geothermal water at 120°C flowing through the tubes of a tube bank located in a duct. Air enters the duct at 20°C and 1 atm with a mean velocity of 4.5 m/s, and flows over the tubes in normal direction. The outer diameter of the tubes is 1.5 cm, and the tubes are arranged in-line with longitudinal and transverse pitches of $S_L = S_T = 5$ cm. There are 6 rows in the flow direction with 10 tubes in each row, as shown in the figure below. Determine the rate of heat transfer per unit length of the tubes, and the pressure drop across the tube bank. The properties of air at 60°C are: $k = 0.02808\ \mathrm{W/m \cdot K}$, $\rho = 1.06$ kg/m^3, $C_p = 1.007$ kJ/kg K, Pr = 0.7202, $\mu = 2.008 \times 10^{-5}\ \mathrm{kg/m \cdot s}$, Pr = $\mathrm{Pr}_{@Ts}$ = 0.7073.

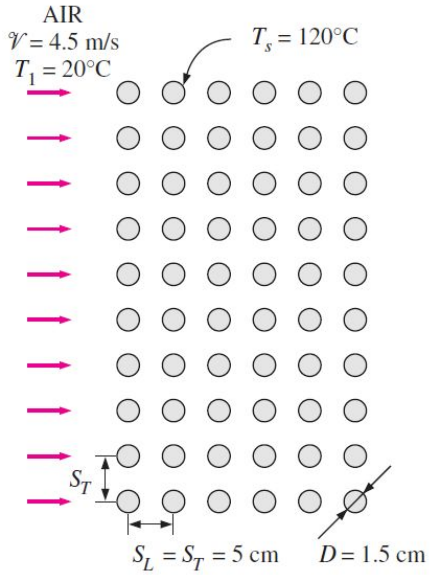

$$\left[Ans: \dot{Q} = 2.49 \times 10^4\,\mathrm{W},\ \Delta p = 21\mathrm{Pa} \right]$$

10. Water enters a 2.5-cm-internal-diameter thin copper tube of a heat exchanger at 15°C at a rate of 0.3 kg/s, and is heated by steam condensing outside at 120°C. If the average heat transfer coefficient is 800 W/m^2 °C, determine the length of the tube required in order to heat the water to 115°C (see figure below). Also determine the rate of steam condensation.
The specific heat of water at 65°C is 4187 J/kg °C. The heat of condensation of steam at 120°C is 2203 kJ/kg.

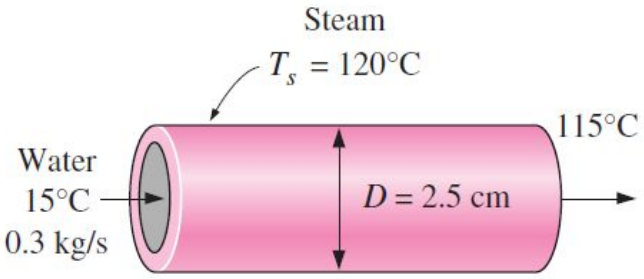

$[Ans: 61\,\text{m}]$

11. Water is to be heated from 15°C to 65°C as it flows through a 3-cm-internal-diameter 5-m-long tube (see figure below). The tube is equipped with an electric resistance heater that provides uniform heating throughout the surface of the tube. The outer surface of the heater is well insulated, so that in steady operation all the heat generated in the heater is transferred to the water in the tube. If the system is to provide hot water at a rate of 10 L/min, determine the power rating of the resistance heater. Also, estimate the inner surface temperature of the pipe at the exit.

The properties of water at 40°C and 1 atm pressure are: $\rho = 992.1\,\text{kg/m}^3$, $C_p = 4179\,\text{J/kg}\cdot{}^{\circ}\text{C}$, $k = 0.631\ \text{W/m}\cdot{}^{\circ}\text{C}$, $Pr = 4.32$, $\upsilon = 0.658\times10^{-6}\,\text{m}^2/\text{s}$.

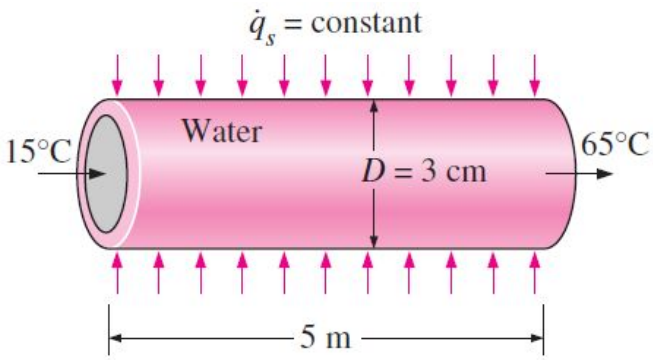

$[Ans: 34.6\,\text{KW}, 115\,{}^{\circ}\text{C}]$

12. Hot air at atmospheric pressure and 8000 enters an 8 m-long uninsulated square duct of cross section 0.2 m x 0.2 m that passes through the attic of a house at a rate of 0.15 m^3/s (figure below). The duct is observed to be nearly isothermal at 60°C. Determine the exit temperature of the air and the rate of heat loss from the duct to the attic space.

The properties of air at 80°C and 1 atm pressure are: $\rho = 0.9994\,\text{kg/m}^3$, $C_p = 1008\,\text{J/kg}\cdot{}^{\circ}\text{C}$, $k = 0.02953\ \text{W/m}\cdot{}^{\circ}\text{C}$, $Pr = 0.7154$, $\upsilon = 2.097\times10^{-5}\,\text{m}^2/\text{s}$.

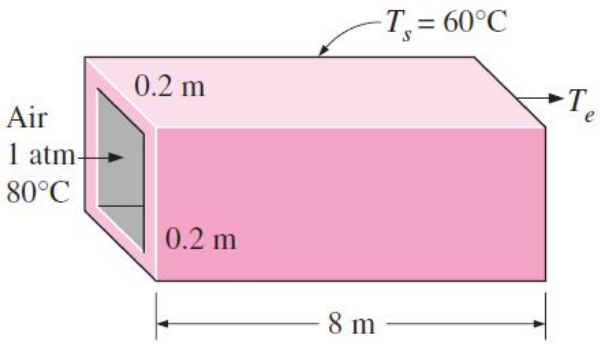

$\left[Ans: 71.3^{o}\text{C}, -1313\ \text{W} \right]$

13. Water at $25\ ^{o}C$ enters a pipe with constant wall heat flux $q_s^{//} = 1\,\text{kW/m}^2$. The flow is hydrodynamically and thermally fully developed. The mass flow rate of water is $\dot{m} = 10\ \text{g/s}$ and the pipe radius is $r_o = 1\,\text{cm}$. Calculate (a) Reynolds number, (b) the heat transfer coefficient, and (c) the difference between the local wall temperature and the local mean (bulk) temperature.

Properties of water at $25\ ^{o}C$: dynamic viscosity $\mu = 8.96 \times 10^{-4}$ kg/ms, thermal conductivity $k_f = 0.6109\ \text{W/m}^{o}C$.

$\left[\text{Ans}: 709, 133.3\ \text{W/m}^2\text{K}, 7.5\ \text{K} \right]$

14. For thermally and hydrodynamically fully developed laminar flow through a circular tube with uniform velocity profile, show that $Nu_D = 8.0$. Assume uniform wall heat flux and also determine the temperature profile.

15. The door of a hot oven is 0.5 m high and is at $200\ ^{o}C$. The outer surface is exposed to atmospheric pressure air at $20\ ^{o}C$. Estimate the average heat transfer coefficient at the outer surface of the door.

Assume the following properties at $T_f = 110\ ^{o}C$: kinematic viscosity $\nu = 24.10 \times 10^{-6}\ \text{m}^2/\text{s}$, thermal conductivity $k = 0.03194\ \text{W/mK}$, $\text{Pr} = 0.704$, volumetric expansion coefficient $\beta = 0.00261\ \text{K}^{-1}$.

$\left[\text{Ans}: 5.399\ \text{W/mK} \right]$

16. Water at $20\ ^oC$ and 1 atm flows over a flat plate at a speed of 0.5 m/s. The width of the plate is 1 m. The entire plate is entirely heated to a temperature of $60\ ^oC$. Calculate the heat transfer in the first 40 cm length of the plate using the Reynolds-Colburn analogy.

Properties of water at $40\ ^oC$: dynamic viscosity $\mu = 6.556\times10^{-4}$ kg/ms, density $\rho = 992.04$ kg/m^3, thermal conductivity $k_f = 0.6328$ W/m$^o C$, $\Pr = 4.334$ and specific pressure at constant pressure $c_p = 4.174$ kJ/kg$^o C$.

$[\text{Ans}: 15.04\ \text{kW}]$

17. Consider a 0.6-m x 0.6-m thin square plate in a room at 30°C. One side of the plate is maintained at a temperature of 90°C, while the other side is insulated, as shown in figure below. Determine the rate of heat transfer from the plate by natural convection if the plate is (a) vertical, (b) horizontal with hot surface facing up, and (c) horizontal with hot surface facing down.

The properties of air at 60^oC and 1 atm pressure are: k = 0.02808 W/m·^{o}C, Pr = 0.7202, $\upsilon = 1.896\times10^{-5}$ m^2/s, $\beta = 1/T_f = 1/333$ K.

$[Ans: 115\ \text{W}, 128\ \text{W}, 64.2\ \text{W}]$

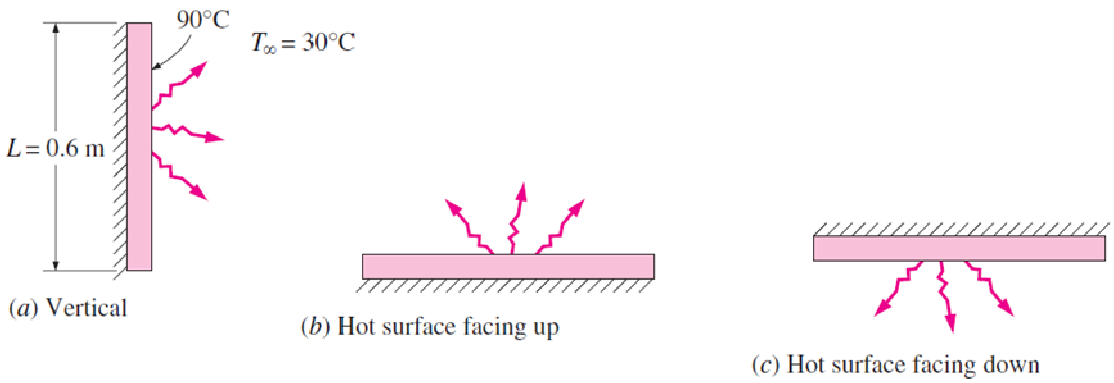

18. A 12-cm-wide and 18-cm-high vertical hot surface in 30°C air is to be cooled by a heat sink with equally spaced fins of rectangular profile shown in the figure below. The fins are 0.1 cm thick and 18 cm long in the vertical direction and have a height of 2.4 cm from the base. Determine the optimum fin spacing and the rate of heat transfer by natural convection from the heat sink if the base temperature is 80°C.

The properties of air at 55^oC and 1 atm pressure are: k = 0.02772 W/m·^{o}C, Pr = 0.7215, $\upsilon = 1.846\times10^{-5}$ m^2/s, $\beta = 1/T_f = 1/328$ K.

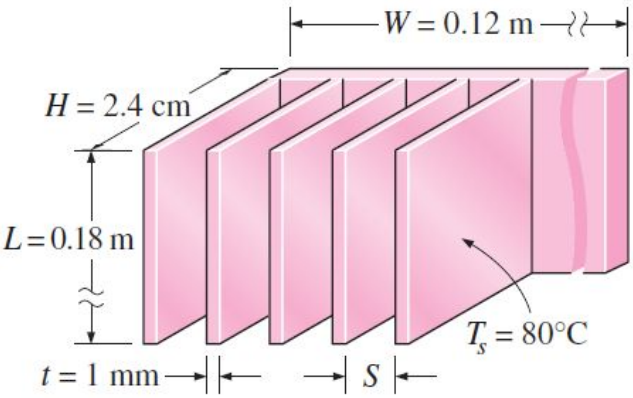

$[Ans: 0.00745\,\text{m}, 1.30\,\text{W}]$