7 Submerged arc welding

7.1 Description

Submerged arc welding, SAW, (Figure 7.1) is a high-productivity method of welding, generally carried out using mechanical welding methods and suitable for use with 1–3 continuous wire electrodes.

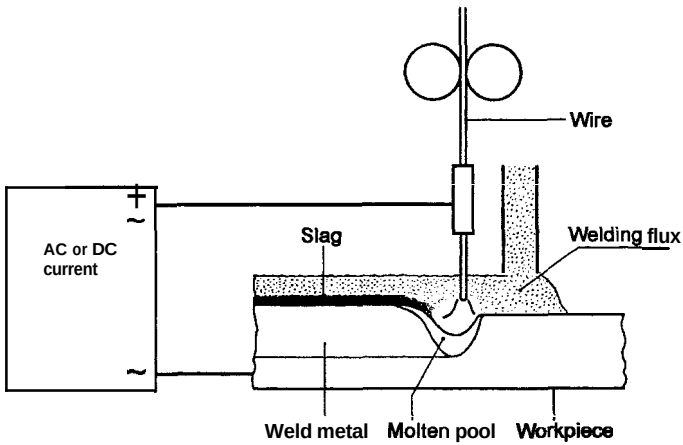

Figure 7.1 Schematic diagram of submerged arc welding.

The arc or arcs are struck and bum beneath a layer of flux, which is supplied to the welding head whilst the welding is in progress. The flux closest to the arc melts and forms slag on the surface of the weld, thus protecting the molten metal from reacting with the oxygen and nitrogen in the air. Residual powder is sucked up, returned to the flux hopper and re-used.

Welding can be carried out with DC or AC.

If the welding parameters are properly set, the appearance of the weld is often very uniform and bright, merging smoothly into the workpiece material. The slag also usually comes away by itself.

The flux masks the light from the arc and there is no smoke or spatter from the weld. This improves working conditions as compared to that of gas metal-arc welding. On the other hand. there is still the need to handle the flux: although its supply to the weld and subsequent recovery are mechanised, it is still a complicating factor.

The advantages of the submerged arc welding method are

- A high deposition rate

  Deep penetration, which allows the quantity of filler material to be reduced
- The ability to achieve a high arc time factor (i.e. effective welding time)
- High weld quality
- Improved working environment compared to other arc welding methods.

Submerged arc welding is used mainly for large items, such as plates in shipyards, longitudinal welding of large tubes or beams, or large cylindrical vessels. The method is used for both butt welds and fillet welds. Another application area is that of cladding, e.g. stainless steel onto ordinary carbon steel, or when applying a coating of some hard wear-resistant material. These processes often use strip electrodes.

7.2 Equipment

The welding equipment consists of a wire feed unit, in the form of a drive motor, reduction gear and feed rollers, which feeds the wire from the wire spool to a contact device, preferably with spring-loaded contact pads. The flux is supplied to the weld from a flux container, and is often recovered after the weld by a suction unit which sucks up the surplus flux and returns it to the flux container.

Travel is normally mechanised, although there are welding torches intended for semi automatic submerged arc welding. The power source, wire feed speed and linear travel speed are all automatically controlled.

Power sources

Power sources for submerged arc welding may have either straight or drooping characteristics. A straight characteristic provides good self-regulation of the arc length. The wire feed speed is sometimes also controlled, which is done by sensing the arc voltage and adjusting the wire feed speed to maintain a constant arc length. This method can be suitable for use with thick wires and in combination with power units having a drooping characteristic,in order to reduce current variations.

Power sources for submerged arc welding are designed for high current and duty cycles, e.g. 800–1600 A, 44 V and 100 % duty cycle. Both AC and DC welding may be used.

One type of AC welding current power source uses thyristors to produce a square wave. This is a relatively simple and satisfactory way of controlling single-phase AC without interrupting the welding current and extinguishing the arc. If the welding cables are long, it is a good idea to run the supply and return cables close together. This reduces the inductive voltage drop, assists the fast zero transitions and avoids the unnecessary creation of magnetic fields around the cables.

Arc striking methods

It can sometimes be difficult to strike the arc if the power source has a low short-circuit current (drooping characteristic). Other causes can be slag on the electrode wire, or flux between the wire and the workpiece. There are many ways of assisting striking, of which the most common is to cut the wire, preferably to produce a sharp point.

Mechanisation aids

Equipment used for the longitudinal travel motion includes

- Welding tractor that run directly on the sheet to be welded (Figure 7.2);
- A welding head that can be mounted on a column and boom unit (Figure 7.3);
- Powered rollers for rotating cylindrical workpieces (Figure 7.4).

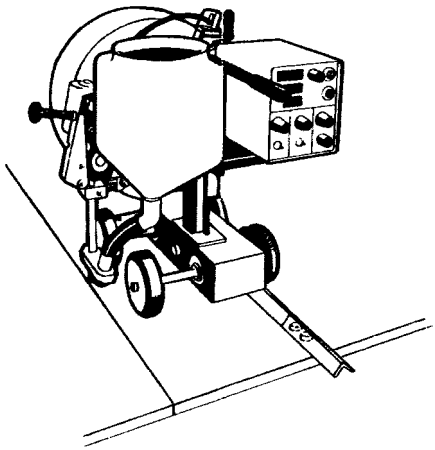

Figure 7.2 A welding tractor for mechanised welding.

It may also be necessary to have some kind of equipment to guide travel along the joint. One simple method is to project a spot of light in front of the welding point, and for the operator to keep this centred on the line of the joint. Another method involves purely mechanical control, using support rollers etc. In the case of larger workpieces, it may be appropriate to have some type of automatic joint tracking control. A common principle is to have a sensor finger that rides in the joint ahead of the arc, to provide servo control of a crosshead that carries the welding head.

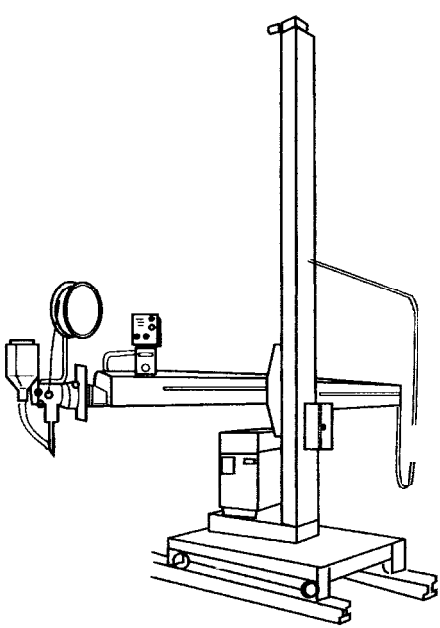

Figure 7.3 Welding head fitted to a column and boom unit.

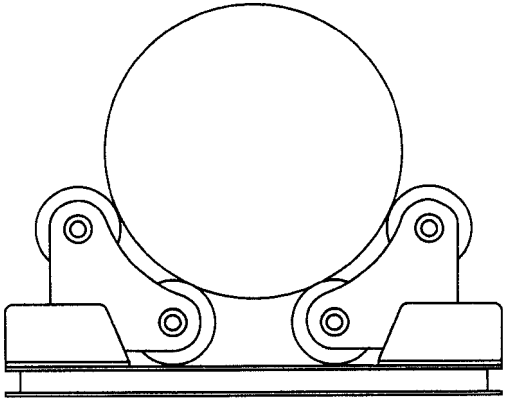

Figure 7.4 Roller beds that automatically adapt to the workpiece diameter. They are often used together with a column and boom unit. The rotational speed is controlled by the built-in motor.

7.3 Filler material

The proper choices of filler wire and flux composition are important for the finished weld. The aim is generally to achieve a composition and strength of the weld metal similar to that of the base material. The weld metal analysis depends on the materials used in the filler wire, with allowance for such factors as possible loss of alloying elements by bum-off in the arc, melting of the base metal and alloying from the flux.

When using a strongly alloying flux in a joint with many passes, there is a risk of build-up of alloying material through uptake of material from previous passes.

Filler wires

The wire grade and its content of alloying metals primarily affect the mechanical properties and chemical analysis of the weld metal. When deciding on an appropriate choice of wire, it is very important to allow for the following factors:

- The strength of the weld metal can be increased by alloying with manganese and silicon.
- The use of molybdenum and nickel as alloying elements improves the toughness of the weld metal at low temperatures.

The filler wire may be copper-plated in order to improve electrical contact and to protect against corrosion. Common wire diameters are 1.6, 2.0, 2.5, 3, 4, 5 and 6 mm.

Filler material in the form of strip (e.g. 0.5 x 100 mm) is often used when applying stainless steel cladding, e.g. to pressure vessel steel. As a result of the rectangular cross-section, penetration is exceptionally low, producing a smooth and wide weld. The favourable low dilution from parent metal does not affect the corrosion resistance of the surface layer. The method is also used for repair of wom parts.

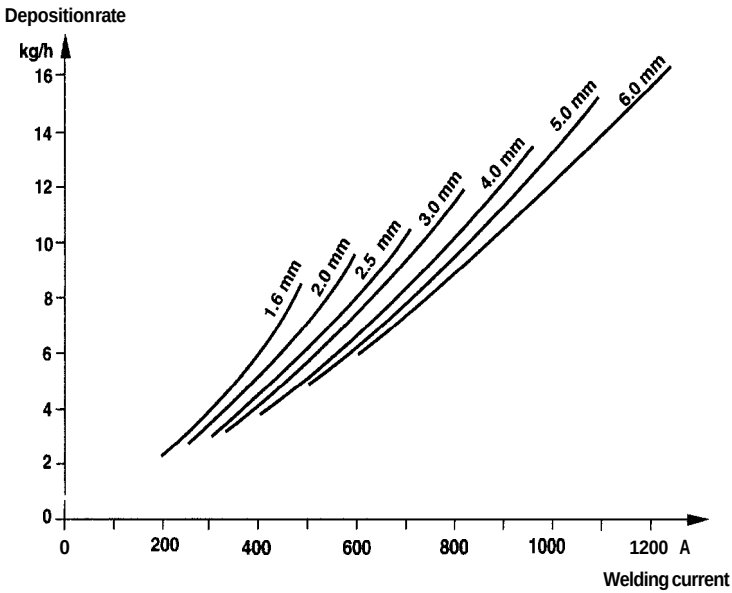

Figure 7.5 Deposition rates for different wire diameters. 30 mm stickout length, DC+ polarity. The higher melting rate for thinner diameters depends on the higher resistive pre-heating in the stickout.

Flux

The most important purposes of the flux are:

- To form a slag and protect the molten weld metal against the harmful effects of the air.
- To supply alloying constituents to the weld metal and control its composition.
- To improve the stability of the arc and to assist ignition.
- To form the weld's surface convexity and give a good surface finish to the weld metal.
- To control the flow characteristics of the molten weld metal.

TABLE 7.1 The melting point of the flux has a considerable effect on the quantity of micro-slags in the weld metal. In this respect, the oxygen content is a measure of the quantity of these slag inclusions.

Type of flux	Basicity	Melt interval, °C	Oxygen content by weight, ppm
Acid	< 0.9	1100–1300	> 750
Neutral	0.9–1.1	1300-1500	550-750
Basic	1.2–2.0	> 1500	300–550
High basic	> 2.0	> 1500	< 300

As with coated electrodes, the flux may be acidic, rutile or basic. Acid and rutile fluxes have excellent welding characteristics and produce a good weld appearance, although the mechanical properties of the weld are more modest. A high proportion of oxides in the form of microslags have an unfavourable effect on the impact toughness of the weld, see Table 7.1. Increasing basicity improves the mechanical properties, but at the expense of somewhat lower welding performance.

The best results are obtained if the depth of the flux when welding is controlled so that the arc is just hidden by the flux bed.

Flux manufacture

Fused flux. Its preparation involves melting minerals at high temperature to produce a glass-like mass. This is allowed to cool, and is then crushed and screened to appropriate grain sizes. Chemical homogeneity of the molten flux is important. It is also important that the flux should not be hygroscopic: damp flux is difficult to handle. However, reactions can occur between the alloying substances when the flux melts, which imposes some limits on the chemical composition of the material.

Agglomerated flux. This is made by adding a suitable binder, such as water-glass, to the dry powder constituents of the flux. It is then dried in rotary kiln at a temperature of 600–900 °C, after which the material is screened to produce the required grain size. A characteristic of agglomerated flux is that it is easy to vary the chemical composition by adding various alloying elements, and that it is very hygroscopic. Agglomerated flux may also be more tolerant of rust and mill scale. Its popularity has increased, so that today it is the most commonly used type of flux.

TABLE 7.2 Properties of fused and agglomeratedflwc.

Flux type	Benefits	Drawbacks
Fused	Non-hygroscopic High grain strength	Alloying elements such as Cr and Ni cannot be incorporated in the flux High density (approx. 1.6 kg/l)
Agglomerated	Alloying elements such as Cr and Ni can be included in the flux Low density (approx. 0.8 kg/l)	Hygroscopic Relatively low grain strength

7.4 The effect of the welding parameters

As with other arc welding methods, the welding parameters have a considerable effect on the characteristics of the welded joint. The variables in submerged arc welding are:

- welding speed
- polarity
- arc voltage
- arc current
- the size and shape of the welding wire
- the filler wire angle
- the number of welding wires
- wire stickout length

- the use of additional filler wire or metal powder additive
- the type of flux (acid / neutral / basic).

The welding speed affects the penetration and the width of the weld (the cross-sectional area of the weld). A high speed produces a narrow weld with little penetration. **An** excessively high speed produces a risk of undercutting, pores, root defects, poor fusion and magnetic blow effect. Too low a speed results in an uneven surface, while extremely low speed produces a mushroom-shaped penetration, and can result in thermal cracking. In addition, it produces a large weld pool, which flows round the arc and results in an uneven surface and slag inclusions.

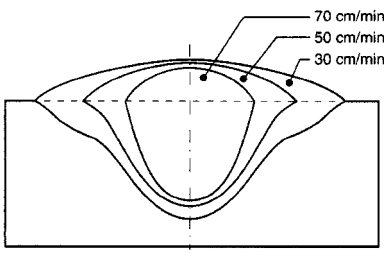

Figure 7.6 The effect of welding speed on weld appearance, with constant values of current and voltage.

Polarity also affects the penetration. If the filler wire is positive, penetration is deeper than if the filler wire is negative. This means that it is better to use negative polarity when performing cladding, in order to avoid mixing the cladding material into the base material. Melting rate is increased by about 30 % percent when negative polarity is used.

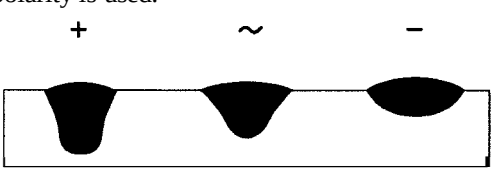

Figure 7.7 The effect of wire polarity on penetration.

A high **arc voltage** produces a broad weld with little penetration. This means that it is suitable for welding wide gaps, and for increasing the admixture of alloying elements from the flux. It also increases flux consumption, and makes removal of the cold slag more difficult. A high arc voltage also increases the risk of undercutting, particularly when making fillet welds. A low arc voltage, on the other hand, produces a high weld convexity and a difficult contact angle with the workpiece material.

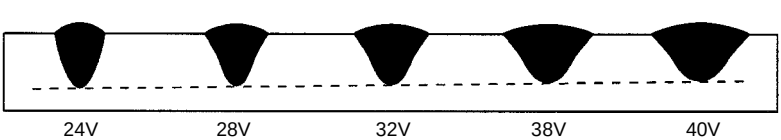

Figure 7.8 The effect of arc voltage on the appearance of the weld.

The **welding current** affects penetration and deposition rate. A high current results in a higher and narrower weld, with a greater penetration depth. However, too high a welding current can result in undercuts, an uneven weld convexity, burn-through, thermal cracking, an inappropriate merging angle with the body material and undercutting.

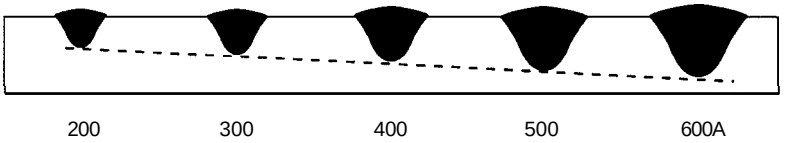

Figure 7.9 The effect of welding current on weld appearunce.

Wire size. A smaller wire diameter results in greater penetration than a thicker wire. For a given current, **arc** stability is better with a thinner wire, due to higher current density. On the other hand, a thicker filler wire with a low welding current can more easily bridge a wide joint.

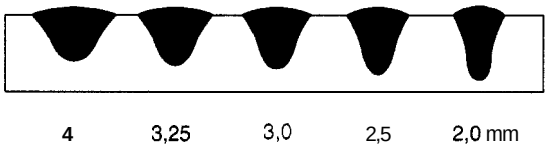

Figure 7.10 The effect of wire diameter on weld appearance.

Wire angle. The angle of the filler wire to the joint has a considerable effect on the shape and penetration of the weld. In certain cases, forehand welding (see Figure 7.11) gives a wider bead that can counteract the tendency to produce a high, narrow weld convexity, and thus allow a higher welding speed to be used.

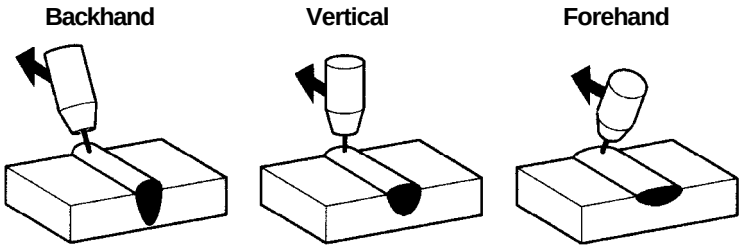

Figure 7.11 The effect of filler wire angle.

7.5 Productivity improvements

Tandem welding. This arrangement employs two or more electrodes, one behind the other, feeding into the same weld pool. The first electrode is connected to a DC positive supply, and the second is connected to an AC supply. This means that the first electrode produces the desired penetration, while the other(s) fill(s) the weld and produce(s) the required shape. The use of AC on the second and subsequent wires also reduces the

problem of magnetic blow effect between the wires. This arrangement can achieve a very high productivity.

Twin arc welding. This involves feeding two wires in parallel through the same contact tip. It differs from tandem welding in using only one power unit and one wire feeder. Depending on the desired result, the wires may be arranged side by side or one behind the other. In comparison with the use of a single wire, twin arc welding results in a higher rate of melt production and improved stability.

A twin-arc welding machine can be easily produced by fitting a single-wire machine with feed rollers and contact tips for two wires. Without very much higher capital costs, it is possible to increase the deposition rate by 30–40 % in comparison with that of a single-wire machine. Wire sizes normally used for butt welding are 2.0, 2.5 and 3.0 mm, with wire separations of about 8 mm.

Long stickout. Increasing the distance between the point where the current enters the wire (the contact tip in the wire feeder unit) and the arc has the effect of resistance-heating the wire, giving a 20–50 % higher deposition rate, which means that the welding speed can be increased. However, the wire must be carefully guided: there is a risk of root defects if it is not properly aligned in the weld. **A** wire straightener can be the answer.

Cold wire. Two wires are used, but only one carries current: the other is fed into the arc from the side. This increases yield by 35–70 %.

Hot wire. This involves the use of an additional wire, resistively heated by the welding current. It can increase the quantity of melted material by 50–100 %.

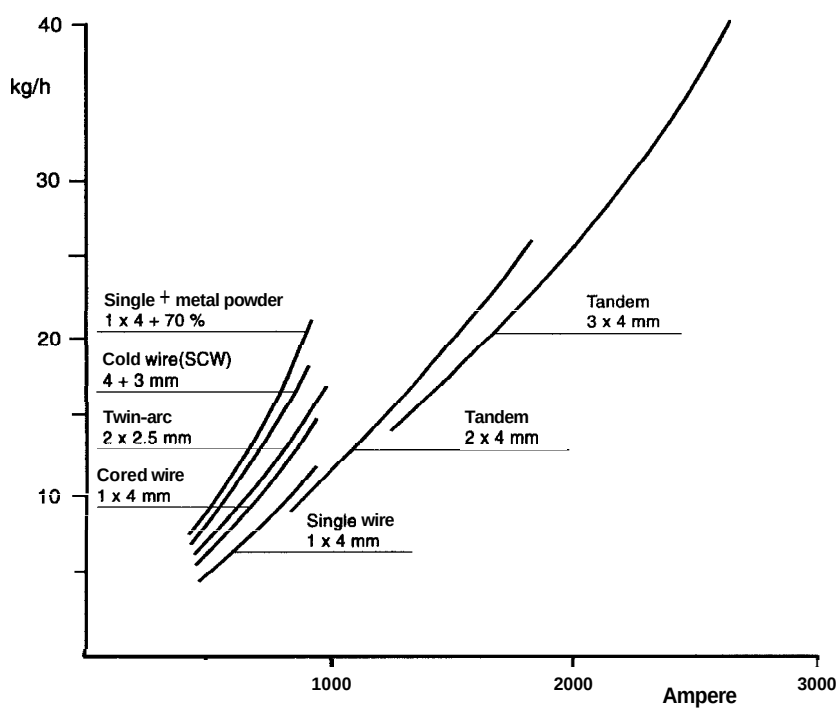

Figure 7.12 Illustration of different possibilities to increase the deposition rate.

Metal powder additive. Metal powder or small pieces of cut filler wire are fed into the weld, and melted by the heat of the arc. This can increase yield by up to 100 %.

The benefits of these methods are:

- Lower heat input (30–45 %) for the same melt volume – less welding distortion.
- Control of the arc pool composition through the use of extra materials and less melting of the workpiece material.
- A narrower HAZ, finer structure of the weld metal and improved impact toughness as a result of the yield energy being lower for a given volume of weld metal.

7.6 Joint preparation

Submerged arc welding is suitable for welding sheet metal from about 1.5 mm thick and upwards, although it is mostly used for somewhat thicker materials.

As the process is a mechanised method, the quality of joint preparation prior to welding is important. Insufficient attention to tolerances or cleaning will result in a defective weld. A clean, properly prepared joint also allows higher welding speeds to be used, with reduced cost of making good, which more than compensates for the more expensive preparation.

Single-sided welding is often convenient, which usually involves some form of root support:

- A backing tongue of steel, which is allowed to remain after welding.
- A backing support in the form of a water-cooled copper bar.
- A flux bed in a grooved copper bar.
- A special ceramic backing support.

Double-sided welding means that there is no need to provide root support. The good penetration of submerged arc welding means that butt welds can be made in plate up to 15 mm thick without requiring a gap or joint preparation. Thicker materials require joint preparation in the form of V-shaped or X-shaped joint faces, perhaps also in conjunction with multiple weld passes.

Asymmetrical X-joint faces are used in order to even out distortion. The first pass is made in the smaller of the two gaps. As the weld metal cools and contracts, it pulls the plate slightly upwards along the line of the joint.

Other types of joint include fillet joints, which are very common. Narrow gap welding is preferable for welding very thick materials.

7.7 Risks of weld defects

Hydrogen embrittlement. This is also referred to as hydrogen cracking, hardening cracking or cold cracking. The cracks occur in the HAZ, close to the melt boundary as the material cools, sometimes several hours after welding. The effect is caused by a combination of shrinkage stresses, hydrogen diffusing in from the weld metal and the formation of the hard martensite phase structure in the metal.

A drawback of all welding processes involving protection by flux is the risk of moisture absorption and the resulting increased risk of cold cracking. The flux should be properly stored in order to keep it *dry*. Materials having high carbon equivalents and

thicknesses must be welded at elevated temperatures, in accordance with the relevant rules.

Hydrogen is introduced from the molten pool through moisture or hydrogen containing elements on the surface of the parent metal. The hydrogen diffuses from the weld bead to the adjacent regions of the heat affected zone. Fast cooling in combination with steels with higher strength can give hardening effect. If hydrogen is present there is a great risk for hydrogen cracking. Thick plates and low heat input gives high cooling rate and this increases the risk for hydrogen cracking. An increased operating temperature of the workpiece and carefully dried consumables is an important way to assure the quality.

Pores can be caused by several factors, such as:

- Moisture in the flux.
- Dirt on the workpiece, such as rust or paint.

Problems with pores have a tendency to increase if the molten metal cools rapidly.

Pinholes are due to the release of gas (mainly hydrogen) during solidification of the metal, i.e. during primary crystallisation. The gas is unable to escape sufficiently easily from the weld metal, but is retained in the metal and acts as nuclei around which the metal solidifies. Pinholes form in the middle of the weld, running along it like a string of beads.

Pinhole formation can be reduced by reducing the speed of welding, carefully cleaning the surface of the weld joint prior to welding.

Poor impact strength due to grain growth occurs in connection with slow cooling. The high performance and good penetration of submerged arc welding means that it is best to weld even somewhat thicker materials with as few passes as possible. However, this results in high yield energy, so it may be better to make several passes when welding difficult materials.

Solidification cracks, also called hot cracks arise as the material cools, if certain combinations of unfavourable conditions occur.

- Low width/depth ratio of the weld penetration.
- High carbon and sulphur contents in the metal.
- Shrinkage stresses occurring as the material cools.

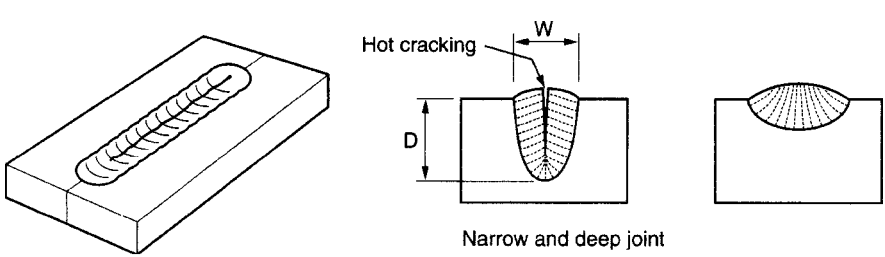

Figure 7.13 Solidification cracks may appear when the weld is deep and narrow.

Submerged arc welding produces a risk of solidification cracking as a result of deep penetration and considerable melting of the workpiece material causing substances from the workpiece material to end up in the weld metal. Simplistically, these cracks can be explained by the solidification front pushing a molten zone in front of it that contains higher concentrations of easily melted substances (or substances that lower the melting point) than in the rest of the weld metal. In a deep, narrow joint, the weld metal solidifies in such a way as to leave a weakened stretch trapped in the middle of the weld, which then breaks to produce a longitudinal crack under the influence of shrinkage stresses.

Hot cracking can be eliminated by forcing the weld to cool from the bottom towards the surface, so that the primary crystals are forced to grow diagonally upwards towards the surface of the weld, e.g. by welding against a heat-removing base.

Welding defects associated with starting and stopping welding can be avoided through the use of starting and stopping tabs that are later removed.

Many highly alloyed steels have a wider range of temperature over which solidification takes place. This increases the susceptibility to solidification cracking. It is also strongly influenced by the solidification direction.

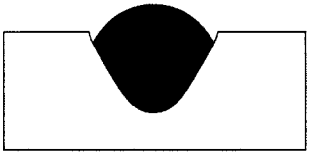

Figure 7.14 Too high voltage or welding speed may result in undercuts.

Undercutting is a defect that indicates that the appropriate voltage range for the process has been exceeded. Too low a voltage results in a narrow, high weld convexity. Increasing the voltage makes the weld wider, but too high a voltage can easily cause undercutting at the edge of the convexity. Too high a linear speed along the weld can cause both a high convexity and undercutting together.

The undercut will appear when the weld metal doesn't fill up the cavity that is cut by the arc. It is most often troublesome in connection with welding of upright fillet joints, where it occurs in the web.

Slag inclusions are uncommon in automatic welds. If they do occur, it is usually between the passes in multi-pass welds. When making such welds in thick plate, care must be taken to remove all traces of slag.

Uneven weld bead will be the result if welding current is high in comparison to the wire diameter – about 1100 **A** or more. This is caused by the high arc pressure on the weld pool. The result of this effect is that the penetration is excessive for the wire size in use, causing the molten metal to be ejected over the edge of the joint and sometimes also causing lack of fusion.

If the current for a wire is in excess of the recommended value, it is necessary to change up to the next wire size.